ES24

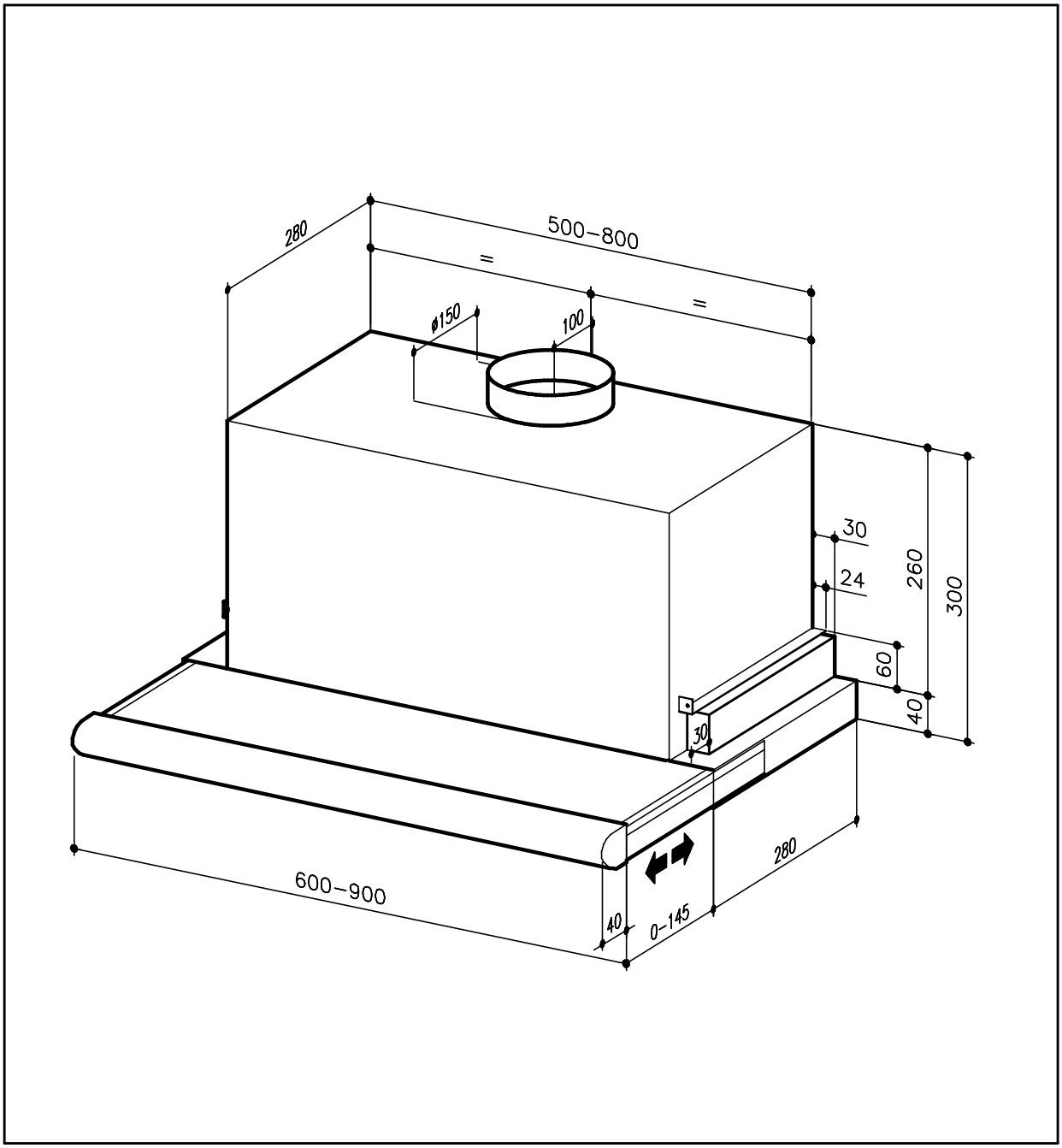

3 set 2003